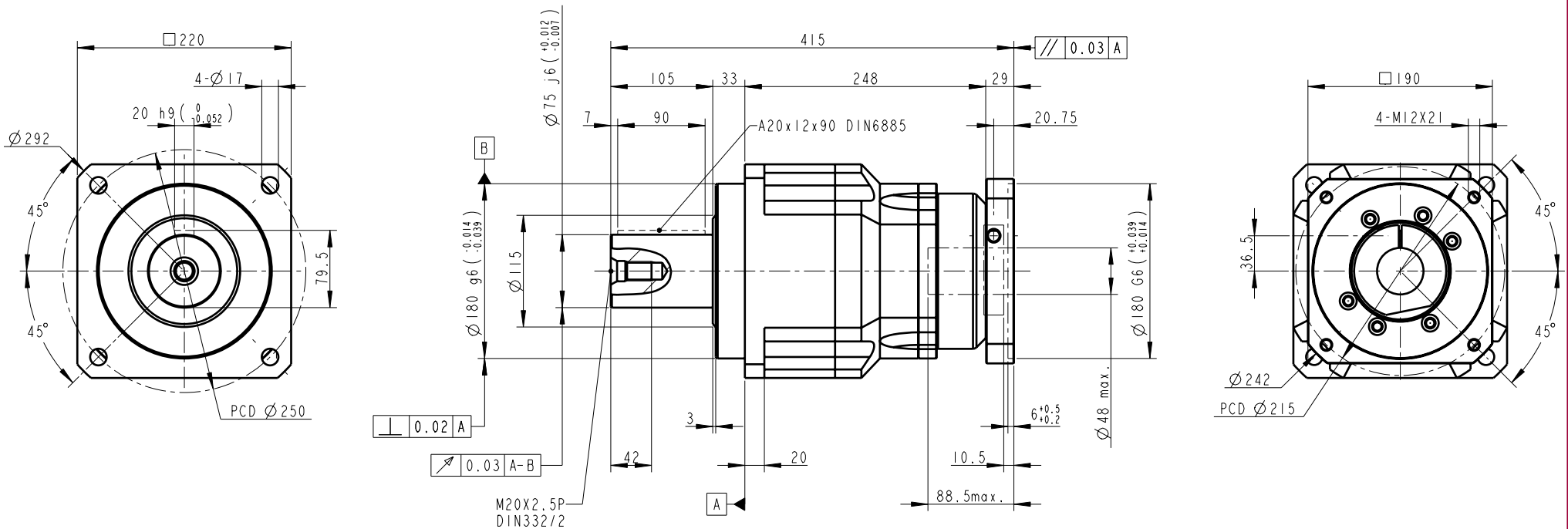

INERTIA: 22.51~23.29kg-cm^2
MASS: 59kg

SHAFT OPTION S1: SMOOTH OUTPUT SHAFT(STANDARD)
SHAFT OPTION S2: OUTPUT SHAFT WITH KEYWAY
MICRO BACKLASH<= 3arcmin
REDUCED BACKLASH<= 5arcmin
STANDARD BACKLASH<= 7arcmin

BUSHING SUPPLIED WHEN MOTOR SHAFT DIAMETER SMALL THAN Ø48

PART NO. AF2202-P4160301 AF220-2, AD-P200-M190-1		APEX DYNAMICS, INC.
APPROVALS	DATE	TITLE AF220 2 STAGES, RATIO= 15~100 AND MOTOR FLANGE MOUNTING
DRAWN Nadia	11-Mar-08	DWG NO. AF2202-P4160301
CHECKED		
APPROVED		SIZE 2A0 / SCALE 1:1 / REV 3.0