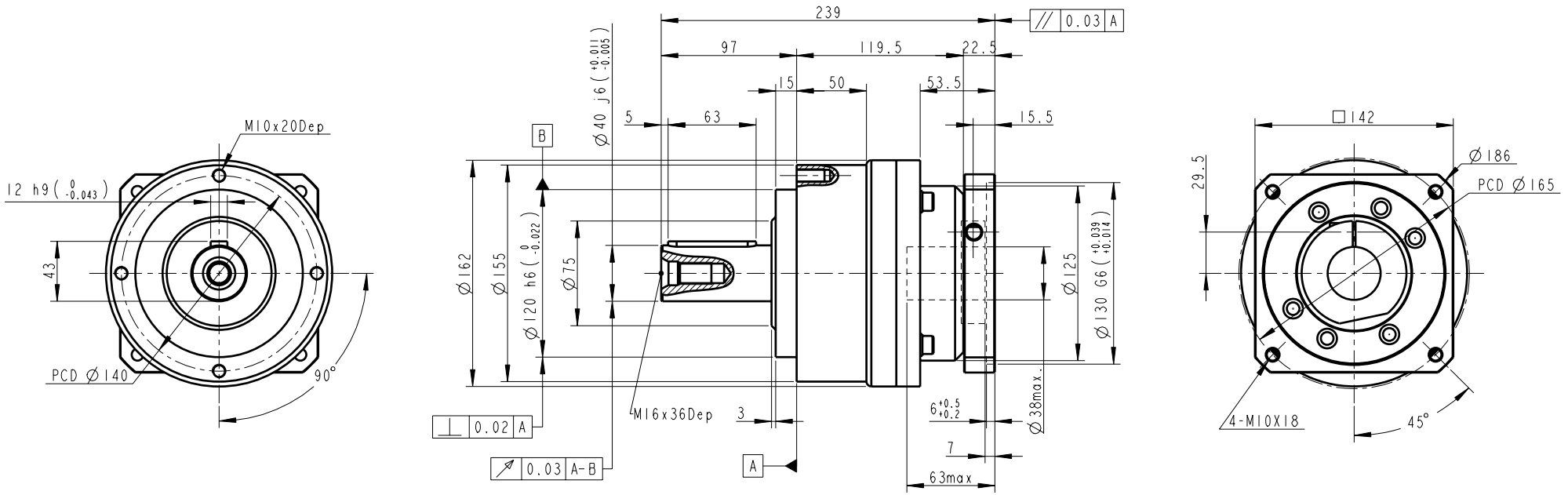

INERTIA: 7.03~9.21kg-cm^2
MASS: 13kg

BACKLASH: 8~12arcmin

BUSHING SUPPLIED WHEN MOTOR SHAFT DIAMETER SMALL THAN Ø38

PART NO. AE1551-P4150201 AE155-1, AD-P140-M142-1		APEX DYNAMICS, INC.
APPROVALS	DATE	TITLE AE155 1 Stage, Ratio=3~10 AND MOTOR FLANGE MOUNTING
DRAWN Ben		
CHECKED		DWG NO. AE1551-P4150201
APPROVED		SIZE A0 / SCALE 1:1 / REV 1.0